ITEM NO.	PART NUMBER	DESCRIPTION	QTY.
1	252623-202	4 POINT BENDING PULLER BODY	1
2	8920K32	10MM ROD (LOADING PROBE)	2
3	91849A665	3/4-16 UNF 2B HEX NUT	1

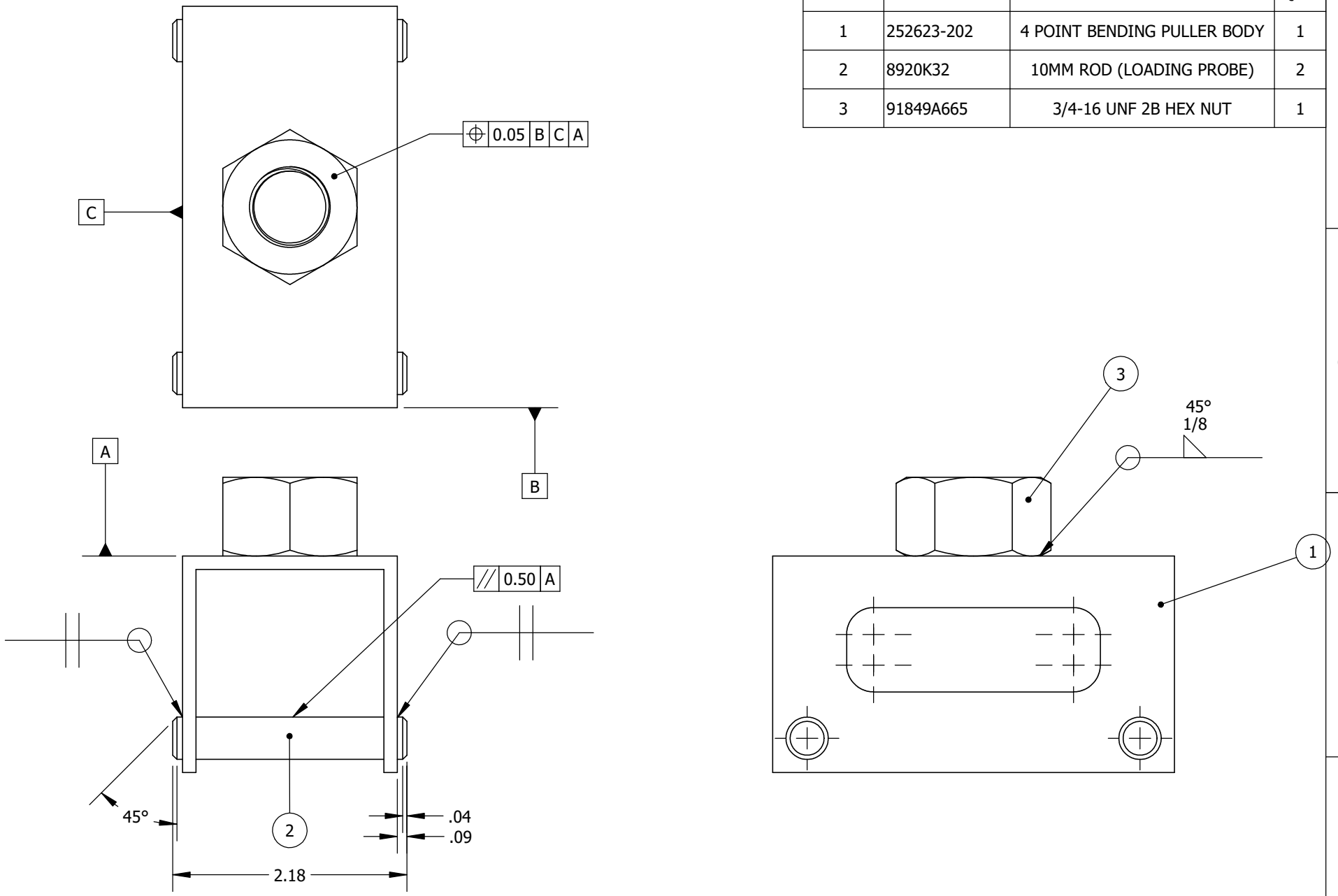

Concordia University	MATERIAL: STEEL - ALLOY - 1018	UNLESS OTHERWISE SPECIFIED: SURFACE ROUGHNESS: √N/A	TITLE: 4 POINT BENDING PULLER ASSEMBLY
	FINISH: AS MACHINED	TOLERANCES: X ± 1, .X ± .1, .XX ± .01, .XXX ± .005, ANGLE ± .5°	
PROPRIETARY INFORMATION NOT TO BE RELEASED WITHOUT WRITTEN AUTHORIZATION FROM CONCORDIA UNIVERSITY	DESIGNER: L.FERRAZZA	PRIMARY DIMENSIONS: INCES UNLESS OTHERWISE SPECIFIED	SIZE: A · DATE: 2025-11-10 · PROJECT: MECH 490
	DRAFTER: L.FERRAZZA	APPROVED: F. LASTNAME · SCALE: 1:1.25 · SHEET: 1/1	DWG. NUMBER: 252623-203 · REV: 2

SOLIDWORKS Educational Product. For Instructional Use Only.